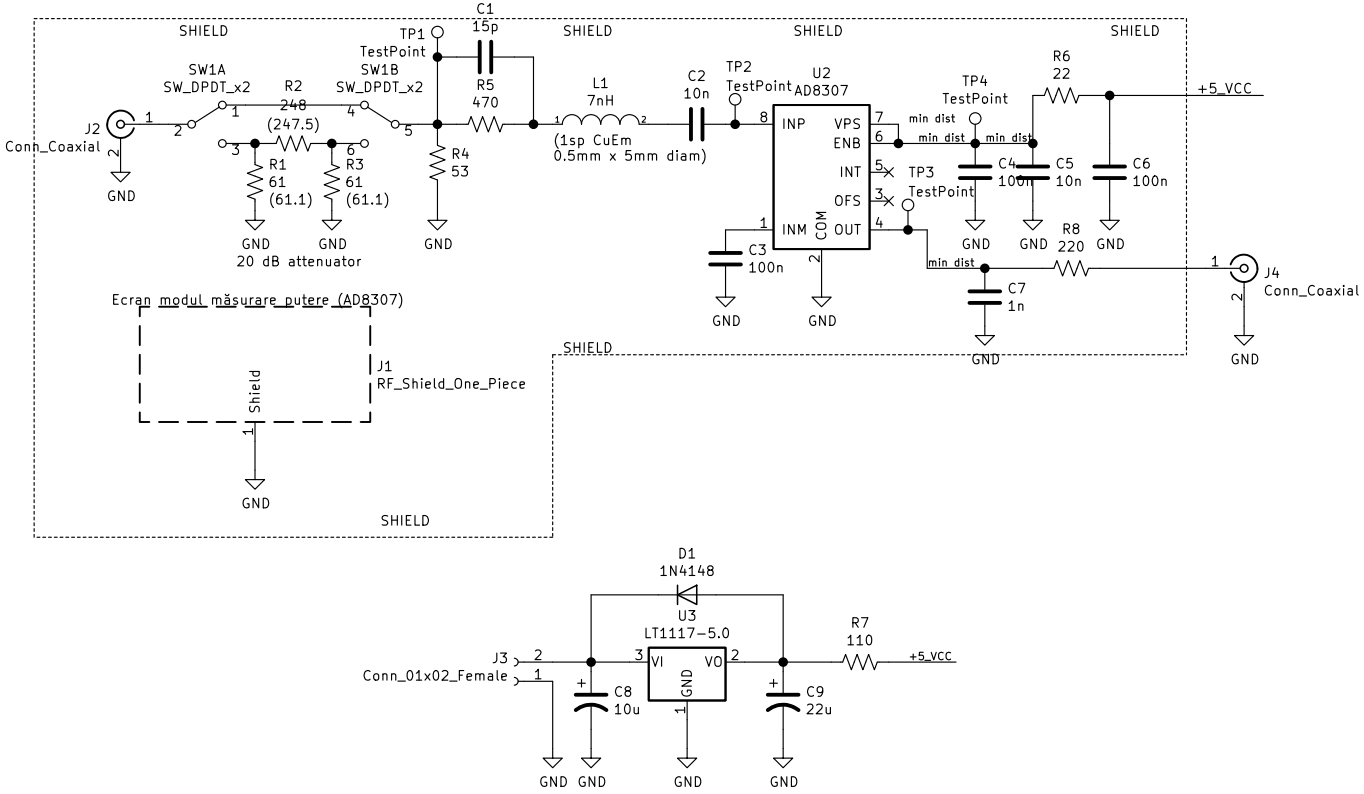

RF power meter with AD8307

AD8307 RF Power Sensor Prototype

YO3ITI – Alauda Projects

Sheet: /

File: 8307.sch

Title: AD8307 RF Power Meter

Size: A4	Date: 2019-02-17	**Rev: 1.0**
KiCad E.D.A. kicad (5.1.5-0)		Id: 1/1